NVS 510 GRAPHICS BOARD (GK107 / P2013 SKU 500)

BD-06416-001_v02 | November 2012
NVIDIA CONFIDENTIAL

Board Specification

DOCUMENT CHANGE HISTORY

BD-06416-001_v02

Version	Date	Authors	Description of Change
01	July 10, 2012	VL, SM	Preliminary Information (Information contained within this document is subject to change)
02	November 14. 2012	VL, SM	•Removed "Preliminary Information" as this board specification is no longer considered preliminary •Added DisplayPort description •Added Display connectivity description •Updated Figure 1 and Figure 2 •Added MTBF data (Table 1) •Added reference board sku (Table 1)

TABLE OF CONTENTS

Overview **1**
Key Features 1
DisplayPort Description 3
Graphics Card Description 3
Display Connectivity Options 4
Configuration 5
Mechanical Specifications **6**
Form Factor 6
Placement of Standard I/O Connectors 7
Display Connectors 8
Mini DisplayPort Connector 8
HDCP Support 9
Power Specifications **10**
Power by Rail 10
Energy Star Report 11
Thermal Specifications **12**
Thermal Qualificaiton Summary 12
Cooling Solution 14
Support Information **16**
Certificates and Agencies 16
Certifications 16
Agencies 17
Languages 18

LIST OF FIGURES

Figure 1. NVS 510 Graphics Board 6
Figure 2. Standard Connector Placements 7
Figure 3. Mini-DisplayPort Connector 8
Figure 4. P2013 Active Fan Sink 14

LIST OF TABLES

Table 1. Display Connectivity Matrix 4
Table 2. Board Configuration 5
Table 3. Mini-DisplayPort Connector Pinout 8
Table 4. Power by Rail 10
Table 5. Energy Star Report 11
Table 6. Test Setup and Configuration 13
Table 7. Thermal Results and Specification 13
Table 8. Fan Specifications 15
Table 9. Board Environmental Conditions 15
Table 10. Languages Supported 18

OVERVIEW

The NVIDIA® NVS™ 510 graphics board (GK107 / P2013 SKU 500) is a PCI Express low profile form factor graphics add-in card based on the Kepler architecture graphics processing unit (GPU). The NVS 510 graphics board is targeted for driving multi-monitor installations in corporate business and enterprise markets like financial trading floors, digital signage, and video surveillance.

The NVS 510 graphics board offers 2 GB of DDR3 memory and is capable of diving up to four independent data or video streams to four displays simultaneously.

Note: NVS 510 supports a maximum of 4 simultaneous displays in Windows 7, Windows 8 and Linux operating systems only (there is a maximum of 2 displays in Windows XP).

KEY FEATURES

GPU

- Maximum core clock: 797 MHz
- NVIDIA's CUDA® cores: 192
- DisplayPort 1.2
- 10-bit internal display processing, including hardware support for 10-bit scan-out
- Full Microsoft DirectX 11, Shader Model 5.0 support
- Full OpenGL 4.3 support
- API support for CUDA C, CUDA C++, DirectCompute 5.0, OpenCL™, Java, Python, Fortran

Board

- PCI Express 2.0 ×16 system interface
- Physical dimensions: 2.713 inches × 6.3 inches, single slot
- Board power: 33.4 W

Display Connectors

- Four mini-DisplayPort (mDP) connectors

Memory

- Maximum memory clock: 891 MHz
- Memory I/O interface: 128-bit
- Total board memory: 2 GB
  - 8 pieces 128M ×16 DDR3
- Memory bandwidth: 28.5 GB/s

Digital Display Support

- DisplayPort output
  - Drives four DisplayPort enabled digital display at resolutions up to 3840 × 2160 at 60 Hz with reduced blanking, when connected natively using the 4 DisplayPort connectors on the NVS 510 graphics card.
- DVI-D output
  - Drives four digital displays at resolutions up to 1920 × 1200 at 60 Hz with reduced blanking using DisplayPort to DVI-D single-link cable adaptors.
  - Drives four digital displays at resolutions up to 2560× 1600 at 60 Hz with reduced blanking using DisplayPort to DVI-D dual-link cable adaptors.
- HDMI output
  - The NVS 510 graphics board is capable of driving four high definition (HD) panels up to resolutions of 1920 × 1080P at 60 Hz using DisplayPort to HDMI cable adaptors.

Analog Display Support

- VGA display output
  - Drives four analog displays at resolutions up to 1920 × 1200 at 60 Hz using DisplayPort to VGA cable adaptors.

BIOS

- 2Mbit serial ROM
- UEFI supported

DISPLAYPORT DESCRIPTION

The NVS 510's integrated DisplayPort 1.2 engine produces phenomenal image quality while driving ultra-high-resolution panels. The NVS 510 supports the following DisplayPort 1.2 features.

- Support for HBR2 bandwidth that enables NVS 510 to natively drive higher resolution via each DisplayPort output (up to 3840 × 2160 at 60 Hz).
- Multi-stream technology (MST), which enables driving multiple independent video streams through a single DisplayPort connector, enabling better cable management.
  - NVS 510 supports various combinations of display resolutions and number of displays when using DisplayPort 1.2 multi stream topology technology.
- Stream cloning, which enable NVS 510 to clone up-to four instances of each display output to drive a maximum of 16 displays. For example, 4 sets of 4 cloned images.

Note: Irrespective of the mode you use NVS 510 -- NVS 510 can only drive up to a maximum of four (4) independent video and data streams.

GRAPHICS CARD DESCRIPTION

The NVS 510 graphics board is the only NVIDIA low profile professional graphics solution that is capable of natively driving 4 displays simultaneously. The NVS 510 is a low power graphics processor that offers professional business graphics features, along with the support for the latest display and video technologies. The NVS 510 GPU brings a new level of graphics performance and display flexibility to the mainstream PC and Workstation platforms. Combined with NVIDIA's nView® advanced desktop management software and NVIDIA's Mosaic technologies, the NVS 510 is the ideal Enterprise Class GPU for users that require single large display or multi-display solutions with the optimal balance between performance, power and acoustics.

NVS 510 drives displays via four mini-DisplayPort connectors. The NVS 510 bracket is designed to provide maximum cable retention with mini-DisplayPort connectors, when connected to displays using the latched mini DisplayPort to DisplayPort cable (mDP-to-DP).

Note: The latched mini-DisplayPort-to-DisplayPort cables are usually bundled with the NVS 510 by NVIDIA's OEM and Channel partners..

Display Connectivity Options

NVS 510 can be connected to any display types using 2 different modes:

- Use NVS 510 along with the latched mDP-to-DP cable (standard DisplayPort mode) - This combination provides a standard-sized DisplayPort output to users, which enables them to upgrade with minimal disruption and reuse existing eco-system of widely deployed standard DisplayPort cables and dongles Also, this is the preferred method of connecting, as it provides the most secure cable connectivity.
- Use NVS 510 directly with optionally available mini DisplayPort cables and dongles (mini DisplayPort mode). This option is preferable for customers who wants to use fewer components to connect to displays, and for whom secure cable connectivity, or reuse of existing standard DisplayPort ecosystem is not a major concern.

The complete matrix of connecting NVS510 to any display type, using either of the above connectivity mode is shown in Table 1.

Table 1. Display Connectivity Matrix

	NVS 510 Connect Option	**Monitor Connector and Display Cable Type**				
		DisplayPort	**Single-link DVI**	**VGA**	**Dual-link DVI**	**HDMI**
NVIS 510 Display Connector	Preferred option: Standard DisplayPort mode (NVS 510 with latched mDP-to-DP cable)	Native	DisplayPort-to-single-link DVI dongle	DIsplayPort -to-VGA dongle	DisplayPort-to-dual-link DVI dongle	DisplayPort -to-HDMI dongle
	Alternate option: Mini DisplayPort mode	mDP-to-DP cable (see note)	Mini DisplayPort-to-single-link DVI dongle (see note)	None	None	Mini DisplayPort -to-HDMI dongle

Note: Both latched and unlatched versions are available.

CONFIGURATION

Table 2 lists the configuration for the NVS 510 graphics board.

Table 2. Board Configuration

Specification	SKU 500 Description
Reference board SKU	900-52013-0000-000
Chip	GK107
Package size GPU	29 mm × 29 mm
Core clock	797 MHz
Memory clock	891 MHz
CUDA cores	192
Frame buffer	2048 MB
Memory I/O	128-bit
Memory configuration	8 pcs 128M × 16 DDR3
Memory bandwidth	28.5 GB/s
Display connectors	Four mini-DisplayPort connectors
Total board power	33.4 W
BAR1 size	256 MB
HDCP supported	Yes
Thermal cooling solution	NVIDIA TM333-1 2BB
Mean time between failures (MTBF)	•Uncontrolled environment: 308988.6213 hours at 35 °C •Controlled environment: 617591.8286 hours at 35 °C

MECHANICAL SPECIFICATIONS

FORM FACTOR

The NVS 510 graphics board is a low profile form factor.

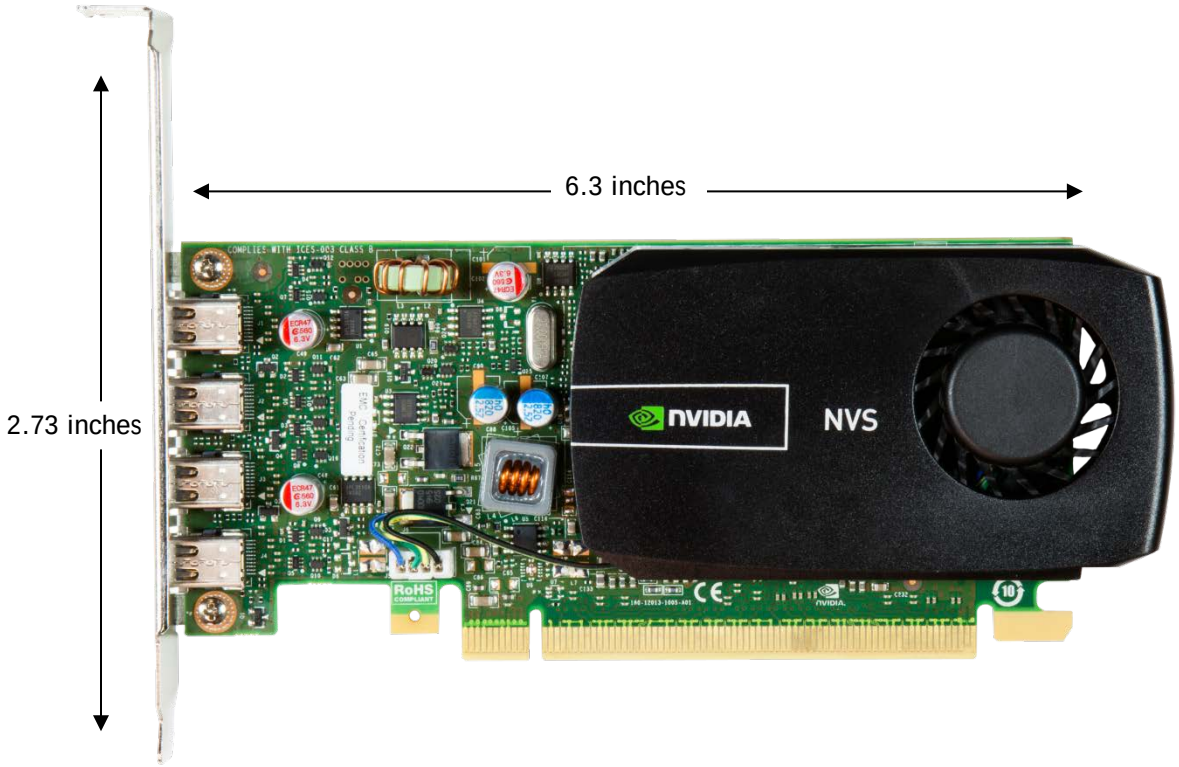

Figure 1. NVS 510 Graphics Board

PLACEMENT OF STANDARD I/O CONNECTORS

Figure 2 shows the standard placement of the connectors for the NVS 510 graphics board. The NVS 510 is designed to provide additional cable retention capability over the standard mini-DisplayPort connector. The NVS 510, when used with the latched mDP-to-DP cables provides a secure and robust way to connect the NVS 510 to any display type.

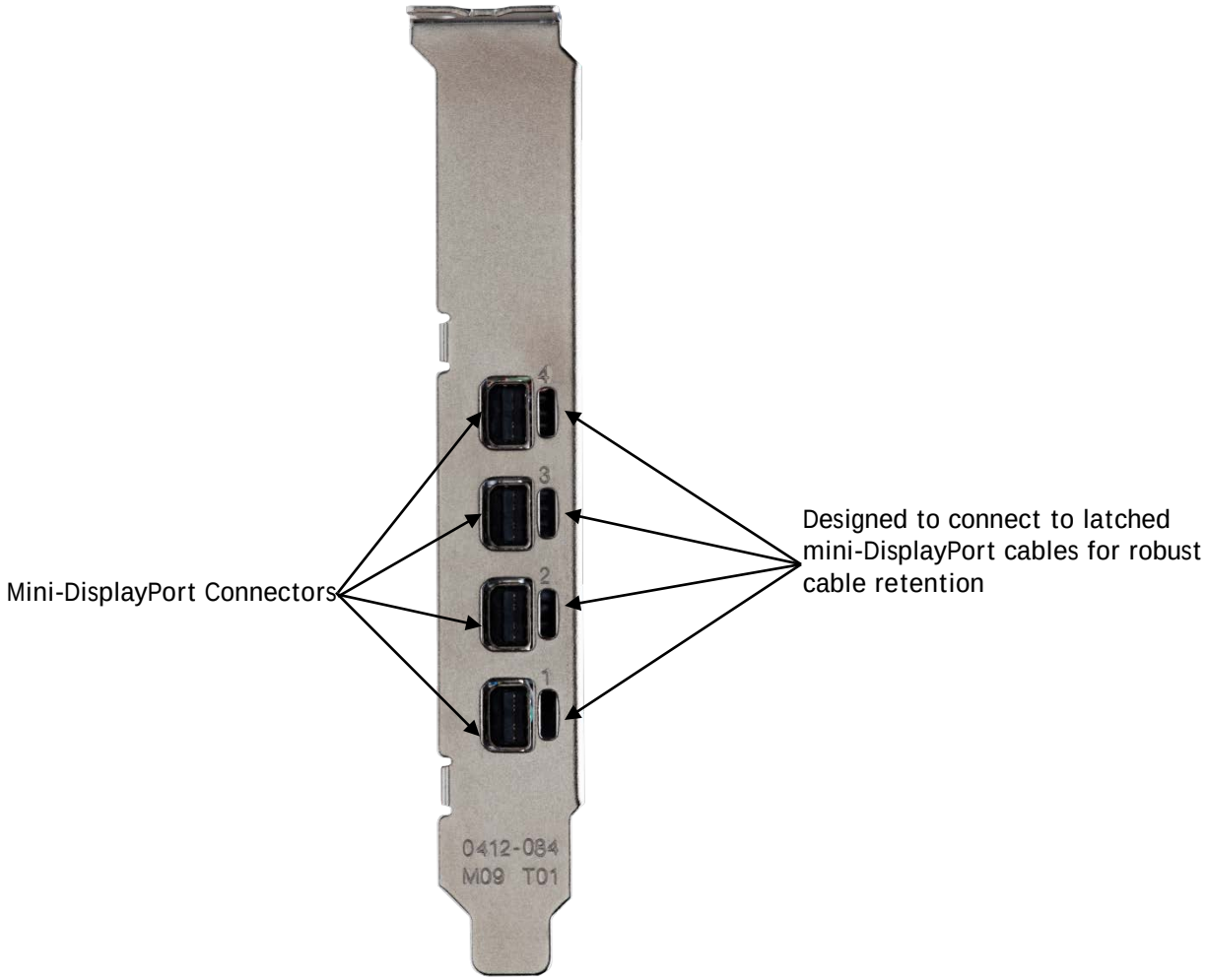

Figure 2. Standard Connector Placements

DISPLAY CONNECTORS

The NVS 510 graphics board supports four mini-DisplayPort connectors.

Mini DisplayPort Connector

The NVS 510 graphics board supports the use of a VESA standard 20-pin mini-DisplayPort connector (Figure 3). The mini-DisplayPort connector interfaces between your system and your display. Table 3 provides the connector pinout

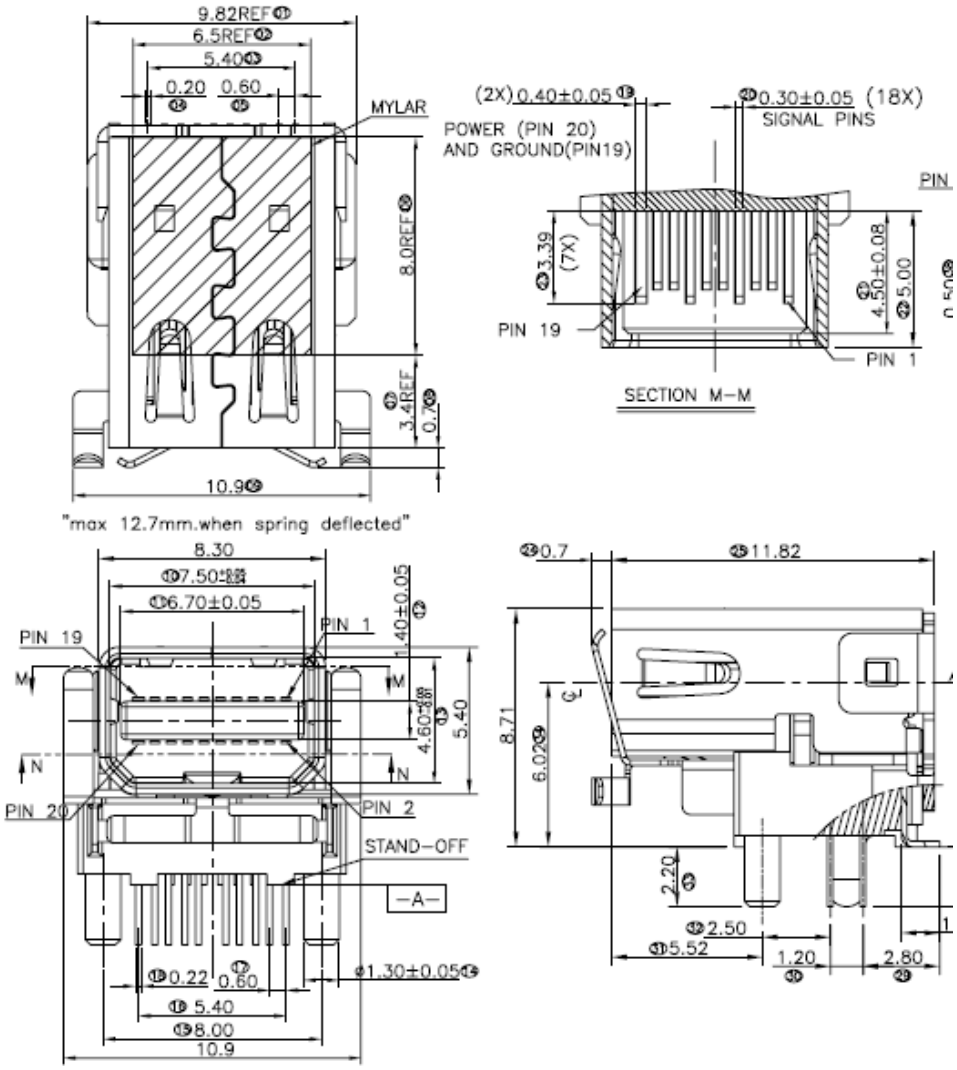

Figure 3. Mini-DisplayPort Connector

Table 3. Mini-DisplayPort Connector Pinout

Pin	Signal Name	Description
1	GND	Ground
2	Hot plug Detect	In
3	Lane 0 (p)	Out
4	CONFIG1	CONFIG
5	Lane 0 (n)	Out
6	CONFIG2	CONFIG
7	GNG	Ground
8	GND	Ground
9	Lane 1 (p)	Out
10	Lane 3 (p)	Out
11	Lane 1 (n)	Out
12	Lane 3 (n)	Out
13	GND	Ground
14	GND	Ground
15	Lane 2 (p)	Out
16	AUX CH (p)	I/O
17	Lane 2 (n)	out
18	AUX CH (n)	I/O
19	Return	RTN
20	DP_PWR	Power Out

HDCP SUPPORT

Support for high definition content protection (HDCP) comes integrated in the GPU used on the NVS 510 graphics board.

The full HDCP specification is available upon request.

POWER SPECIFICATIONS

The NVS 510 graphics board is a power optimized board solution. Power is taken from the PCI Express host bus.

POWER BY RAIL

Table 4 lists the power by rail numbers for the NVS 510 graphics board

Table 4. Power by Rail

TDP Application	PEX12V	PEX3V3	Total Board Power
3DMark11	32.39 W	1.0 W	33.39 W

ENERGY STAR REPORT

Table 5 lists the energy star report for the NVS 510 graphics board.

Table 5. Energy Star Report

Specification	Description
Brand	NVS 510
GPU	GK107
Board	P2013
SKU	500
Clocks	•797 MHz (core clock) •891 MHz (memory clock)
NVVDD	0.9 V
Frame buffer	128-bit
Memory	2048 MB DDR3 SDRAM
PCI Express	×16
ASPM OFF ratio	2.9:1
ASPM ON ratio	4.6:1
Maximum power: ASPM OFF	25.84 W
Maximum power: ASPM ON	25.83 W
Idle power: ASPM OFF	8.86W
Idle power: ASPM ON	5.56 W

THERMAL SPECIFICATIONS

THERMAL QUALIFICAITON SUMMARY

The information contained in this summary report is intended to provide users of the NVS 510 graphics processor with thermal information necessary to assist in thermal management efforts. This information is not intended to provide a specific thermal management solution. However, it does show an approach that result in the reliable operation of the NVS 510 GPU.

The product and cooling solutions used are:

- Device product: NVS 510 graphics board.
- Cooling solution: Active fan sink solution (designed by NVIDIA, supplied by Cooler Master), NV P/N: 095-0333-610. The cooling solution assembly includes a heat sink, fan, backplate, thermal grease interface material and screws.
- Result: Under the operating conditions described in the following tables, the NVS 510 passed thermal qualification.

Table 6. Test Setup and Configuration

System Part	Description
CPU	Intel Core i7 965 at 3.20 GHz
Motherboard	GIGABYTE GA-EX58-UD3R
DRAM	DDR3-1600
PC operating system	Windows 7-64
Graphics board	P2013 SKU 500
BIOS	80.07.43.00.02
Display driver	304.27
GPU	NVS 510
Clock speeds	•797 MHz (core clock) •891 MHz (memory clock)
Core graphics voltage	0.9 V

Table 7. Thermal Results and Specification

Test Application (3DMark11)	Temperature (°C)*
GPU Junction temperature (T_j) at the TDP**	85
GPU Slowdown temperature (maximum T_j)	101
GPU Shutdown temperature (T_j)	106
Maximum fan inlet temperature	55

NOTE:
* Junction temperature is reported by NVIDIA thermal sensor
** TDP – Thermal design power.

COOLING SOLUTION

NVIDIA has designed an active fan sink (Figure 4) to cool the GPU, memories and power components. For fan specifications refer to Table 8 and for board environmental conditions refer to Table 9.

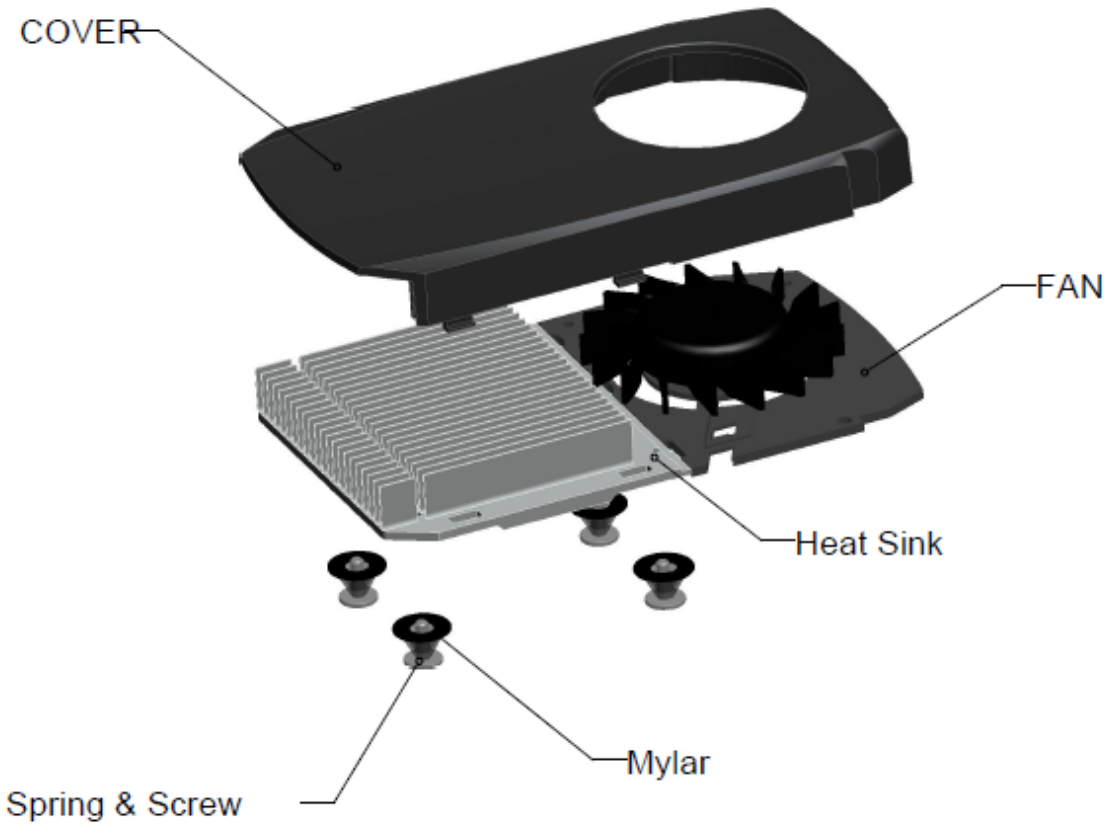

Figure 4. P2013 Active Fan Sink

Table 8. Fan Specifications

Specifications	Conditions
Rated voltage	12 V
Operating voltage	4 – 13.8 V DC
Rated current	0.24 Amp
Rated power	2.88 W
Speed	5,500 RPM
Fan life expectance	50,000 hours continuous operation at 55 °C with 15-65% RH

Table 9. Board Environmental Conditions

Specifications	Conditions
Operating temperature	0 °C to 55 °C
Storage temperature	-40 °C to 75 °C
Operating humidity	5% to 90% relative humidity
Storage humidity	5% to 95% relative humidity

SUPPORT INFORMATION

CERTIFICATES AND AGENCIES

Certifications

- Windows Hardware Quality Lab (WHQL):
  - Certified Windows 7 and Windows 8
  - Signed Driver for Windows XP and Windows Vista
- Ergonomic requirements for office work W/VDTs (ISO 9241)
- EU Reduction of Hazardous Substances (EU RoHS)
- Joint Industry guide (J-STD) / Registration, Evaluation, Authorization, and Restriction of Chemical Substance (EU) – (JIG / Reach)
- Halogen Free(HF)
- EU Waste Electrical and Electronic Equipment (WEEE)

Agencies

- Australian Communications Authority and Radio Spectrum Management Group of New Zealand (C-Tick)
- Bureau of Standards, Metrology, and Inspection (BSMI)
- Conformité Européenne (CE)
- Federal Communications Commission (FCC)
- Industry Canada - Interference-Causing Equipment Standard (ICES)
- Korean Communications Commission (KCC)
- Underwriters Laboratories (cUL, UL)
- Voluntary Control Council for Interference (VCCI)

LANGUAGES

Table 10. Languages Supported

	Windows XP	Windows Vista	Windows 7	Windows 8	Linux
English (US)	Yes	Yes	Yes	Yes	Yes
English (UK)	Yes	Yes	Yes	Yes	Yes
Arabic	Yes	Yes	Yes	Yes	
Chinese, Simplified	Yes	Yes	Yes	Yes	
Chinese, Traditional	Yes	Yes	Yes	Yes	
Czech	Yes	Yes	Yes	Yes	
Danish	Yes	Yes	Yes	Yes	
Dutch	Yes	Yes	Yes	Yes	
Finnish	Yes	Yes	Yes	Yes	
French	Yes	Yes	Yes	Yes	
German	Yes	Yes	Yes	Yes	
Greek	Yes	Yes	Yes	Yes	
Hebrew	Yes	Yes	Yes	Yes	
Hungarian	Yes	Yes	Yes	Yes	
Italian	Yes	Yes	Yes	Yes	
Japanese	Yes	Yes	Yes	Yes	
Korean	Yes	Yes	Yes	Yes	
Norwegian	Yes	Yes	Yes	Yes	
Polish	Yes	Yes	Yes	Yes	
Portuguese (Brazil)	Yes	Yes	Yes	Yes	
Portuguese (European/Iberian)	Yes	Yes	Yes	Yes	
Russian	Yes	Yes	Yes	Yes	
Slovak	Yes	Yes	Yes	Yes	
Slovenian	Yes	Yes	Yes	Yes	
Spanish	Yes	Yes	Yes	Yes	
Spanish (Latin America)	Yes	Yes	Yes	Yes	
Swedish	Yes	Yes	Yes	Yes	
Thai	Yes	Yes	Yes	Yes	
Turkish	Yes	Yes	Yes	Yes	

Notice

ALL NVIDIA DESIGN SPECIFICATIONS, REFERENCE BOARDS, FILES, DRAWINGS, DIAGNOSTICS, LISTS, AND OTHER DOCUMENTS (TOGETHER AND SEPARATELY, "MATERIALS") ARE BEING PROVIDED "AS IS." NVIDIA MAKES NO WARRANTIES, EXPRESSED, IMPLIED, STATUTORY, OR OTHERWISE WITH RESPECT TO THE MATERIALS, AND EXPRESSLY DISCLAIMS ALL IMPLIED WARRANTIES OF NONINFRINGEMENT, MERCHANTABILITY, AND FITNESS FOR A PARTICULAR PURPOSE.

Information furnished is believed to be accurate and reliable. However, NVIDIA Corporation assumes no responsibility for the consequences of use of such information or for any infringement of patents or other rights of third parties that may result from its use. No license is granted by implication of otherwise under any patent rights of NVIDIA Corporation. Specifications mentioned in this publication are subject to change without notice. This publication supersedes and replaces all other information previously supplied. NVIDIA Corporation products are not authorized as critical components in life support devices or systems without express written approval of NVIDIA Corporation.

HDMI

HDMI, the HDMI logo, and High-Definition Multimedia Interface are trademarks or registered trademarks of HDMI Licensing LLC.

OpenCL

OpenCL is a trademark of Apple Inc. used under license to the Khronos Group Inc.

Trademarks

NVIDIA, the NVIDIA logo, CUDA, nVIEW, and NVS are trademarks and/or registered trademarks of NVIDIA Corporation in the U.S. and other countries. Other company and product names may be trademarks of the respective companies with which they are associated.

Copyright

© 2012 NVIDIA Corporation. All rights reserved.